The aluminum houses factory co. ltd. Depends in respect of its products on high quality European profiles .

Particulars of the profiles :

Specification of raw aluminum
Aluminum cast composed of aluminum < magnesium and silicon (0.5)

Type of profiles

Non oxidized profiles (profiles of non processed surface)

- Oxidized profiles
- Oxidization process

The oxidization process is carried out in light sulfuric acid pool by using direct electric direct electric then adding oxidization cover with thickness of 25 micron in accordance with Britain standard 1615 and german standard 17611 .

Advantages of Oxidization:

- Protection against changing weather factors and humidity
- Challenging usage circumstances and increasing tolerance capability and scratching .

Admissible variation in sizes:

This shall be according to german standard DIN 17616-1748
Thermal processing T6

Characteeristics of designing technical profiles :

1-Stairs

. design of salient lines and curved shape of the broad stairs will help in supporting and ease movement of the feet during using of stairs and sliding

. design of the side vertical pole to bear load 150kg

. design of rubber mate (ABDM) to give maximum stability and load

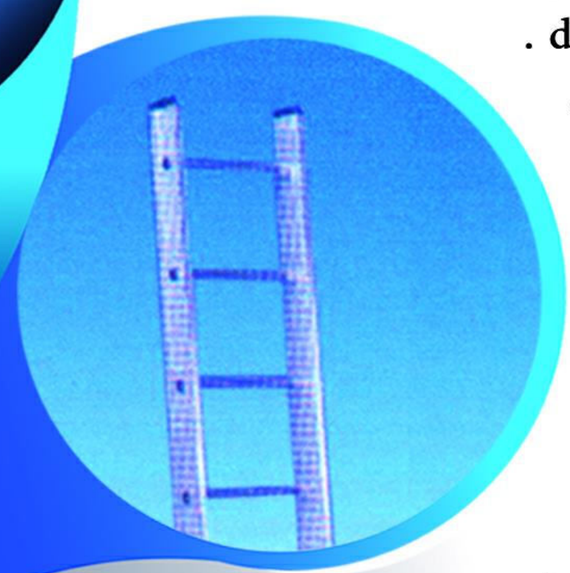

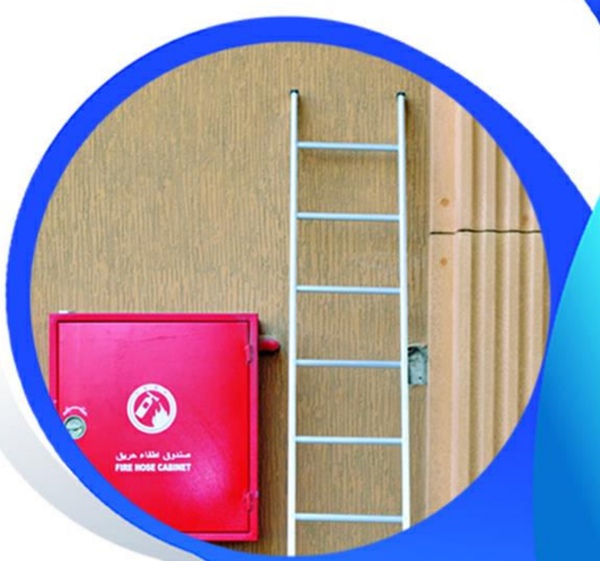

2-Water drainage panel:

. designed to give beautiful shape appropriate to all needs

. design of connection of sections by compression to give more durability to product

. the section has been in sailent shape to avoid sliding

3-Cover of manholes and water tank :

. the design of internal frame section had been made to enable erection of dual broad rubber to perevent spread of bad smell for any undesirable bodies in the manholes or water tanks

. designed to bear weight up to 1.5 ton

. special designed of water tank cover in addition to brought net to prevent falling down of large bodies during usage

. using of net from polymer material (british standard) to prevent any cracking in the cement works which may be caused due to use of steel net

تعتمد شركة مصنع منازل الالمنيوم المحدودة في منتجاتها على قطاعات اوروبية عالية الجودة

خواص القطاعات:-

مواصفات الالمنيوم الخام:

سبيكة الالمنيوم مكونة من الالمنيوم و المغنيسيوم والسليكون (٠,٥)

أنواع القطاعات

- **قطاعات غير مؤكسدة (قطاعات غير معالجة السطح)**
- **قطاعات مؤكسدة**

عملية الاكسدة

تجري عملية الاكسدة في احواض حامض الكبريتيك المخفف باستخدام تيار كهربائي مباشر ويتم إضفاء طبق ة الاكسدة بسمك يصل الى ٢٥ ميكرون وذلك وفقا للمواصفات البريطانية ١٦١٥ و الالمانية ١٧٦١١

مميزات الاكسدة

- **مقاومة العوامل الجوية والرطوبة**
- **مقاومة ظروف الاستخدام وزيادة قوة الاحتمال والخدش**
- **التفاوت المسموح في المقاييس**

يتم ذلك وفقا للمواصفات الالمانية DIN ١٧٦١٦ - ١٧٤٨

- **معالجة حرارياً T٦**

OTHER PRODUCTS

خواص تصميم القطاعات الفنية:-

١- السلالم

- **التصميم ذو الخطوط البارزة و الشكل المقوس لدرج السلم العريض يساعد على الثبات وراحة القدم اثناء الاستخدام و عدم الانزلاق .**
- **تصميم القائم الجانبي مصمم لتحمل ١٥٠ كجم**
- **تصميم الدعاسة المطاطية (اي بي دي ام) لاعطاء اكبر نسبة ثبات و تحمل**

٢-مجرى تصريف المياه

- **صمم لاعطاء شكل جميل يناسب جميع الاحتياجات**
- **تصميم ربط القواطع بطريقة الكبس لاعطاء المتانة للمنتج**
- **صـ مـ م القاطع بشكل بارز لتجنب الانزلاق**

٣-أغطية غرفة التفتيش وخزانات المياه

- **التصميم لقطاع الحلق الداخلي مصمم ليتم تركيب مطاط مزدوج وعريض لمنع تسرب الروائح او اي اجسام غير مرغوب بها من والى الخزان**
- **مصمم لتحمل اوزان حتى ١,٥ طن**
- **تصميم خاص لغطاء خزان المياة اضافة شبك عريض لمنع وقوع اجسام كبيرة اثناء الاستخدام**
- **استخدام شبك من مادة بوليمر (مواصفات بريطانية) لمنع اي تشققات في الصبة التي يسببها استخدام شبك الحديد**

DUAL PURPOSE STEP TYPE سلـــــم مزدوج

DOMESTIC STEP TYPE سلم مزدوج مغير

CODE	STEP	LENGTH/MT	STEP SIZE (MM)	PROFILE	WEIGHT/KG
LDDS03	3	1.00MT	80	76 x 25	4.04
LDDS04	4	1.20MT	80	76 x 25	5.25

DUAL PURPOSE STEP EXTENSION TYPE سلم مزدوج ممتد

CODE	STEP	LENGTH/MT	STEP SIZE (MM)	PROFILE	WEIGHT/KG
LDDE05	5	1.50 - 2.70MT	80	76 x 25	6.20
LDDE06	6	1.80 - 3.30MT	80	76 x 25	7.95
LDDE07	7	2.10 - 3.60MT	80	76 x 25	9.25
LDDE08	8	2.40 - 4.50MT	80	76 x 25	10.65
LDDE09	9	2.70 - 5.10MT	80	76 x 25	12.20
LDDE10	10	3.00 - 5.70MT	80	76 x 25	13.52

DUAL PURPOSE STEP TYPE سلم مزدوج

CODE	STEP	LENGTH/MT	STEP SIZE (MM)	PROFILE	WEIGHT/KG
LDDP12	12	3.60MT	80	76 x 25	17.92
LDDP14	14	4.2MT	80	76 x 25	21.54
LDDP17	17	5.2MT	80	76 x 25	28.14

SINGLE STRAIGHT LADDER WIDE STEP سلم مفرد درجة عريضة

CODE	STEP	LENGTH/MT	STEP SIZE (MM)	PROFILE	WEIGHT/KG
LDSH06	6	1.80 MT	420 x 80	76 x 25	4.80
LDSH08	8	2.40 MT	420 x 80	76 x 25	6.30
LDSH10	10	3.00 MT	420 x 80	76 x 25	7.70
LDSH12	12	3.60 MT	420 x 80	76 x 25	9.25
LDSH14	14	4.20 MT	420 x 80	76 x 25	10.65
LDSH16	16	4.80 MT	420 x 80	76 x 25	12.15
LDSH18	18	5.40 MT	420 x 80	76 x 25	13.55
LDSH20	20	6.00 MT	420 x 80	76 x 25	15.50

SINGLE STRAIGHT LADDER ROUND STEP سلم مفرد درجة دائرية

CODE	STEP	LENGTH/MT	STEP SIZE (MM)	PROFILE	WEIGHT/KG
LDSR06	6	1.80 MT	420 x 30	55 x 25	3.80
LDSR08	8	2.40 MT	420 x 30	55 x 25	5.05
LDSR10	10	3.00 MT	420 x 30	55 x 25	6.30
LDSR12	12	6.60 MT	420 x 30	55 x 25	7.60
LDSR14	14	4.20 MT	420 x 30	75 x 25	8.90
LDSR16	16	4.80 MT	420 x 30	75 x 25	10.20
LDSR18	18	5.40 MT	420 x 30	75 x 25	11.50
LDSR20	20	6.00 MT	420 x 30	75 x 25	12.85

WATER GRILL مجرى تصريف المياه

CODE	LENGTH/MT (MM)	PROFILE (MM)	WEIGHT/KG
WGBH13050	50 cm	120 x 115 x 10.5	2.2
WGBH13100	100 cm	120 x 115 x 10.5	4.12
WGBH20150	150 cm	120 x 115 x 10.5	6
WGBH20200	200 cm	120 x 115 x 10.5	7.9
WGBH20250	250 cm	120 x 115 x 10.5	9.80
WGBH20300	300 cm	120 x 115 x 10.5	11.7
WGBH20400	400 cm	120 x 115 x 10.5	15.5
WGBH20500	500 cm	120 x 115 x 10.5	19.2
WGBH20600	600 cm	120 x 115 x 10.5	23.2

WATER GRILL مجرى تصريف المياه

CODE	LENGTH/MT (MM)	PROFILE (MM)	WEIGHT/KG
WGS13050	50 cm	120 x 115 x 10.5	2.02
WGS13100	100 cm	120 x 115 x 10.5	3.78
WGS20150	150 cm	120 x 115 x 10.5	5.51
WGS20200	200 cm	120 x 115 x 10.5	7.25
WGS20250	250 cm	120 x 115 x 10.5	9.05
WGS20300	300 cm	120 x 115 x 10.5	10.80
WGS20400	400 cm	120 x 115 x 10.5	14.30
WGS20500	500 cm	120 x 115 x 10.5	17.70
WGS20600	600 cm	120 x 115 x 10.5	21.30

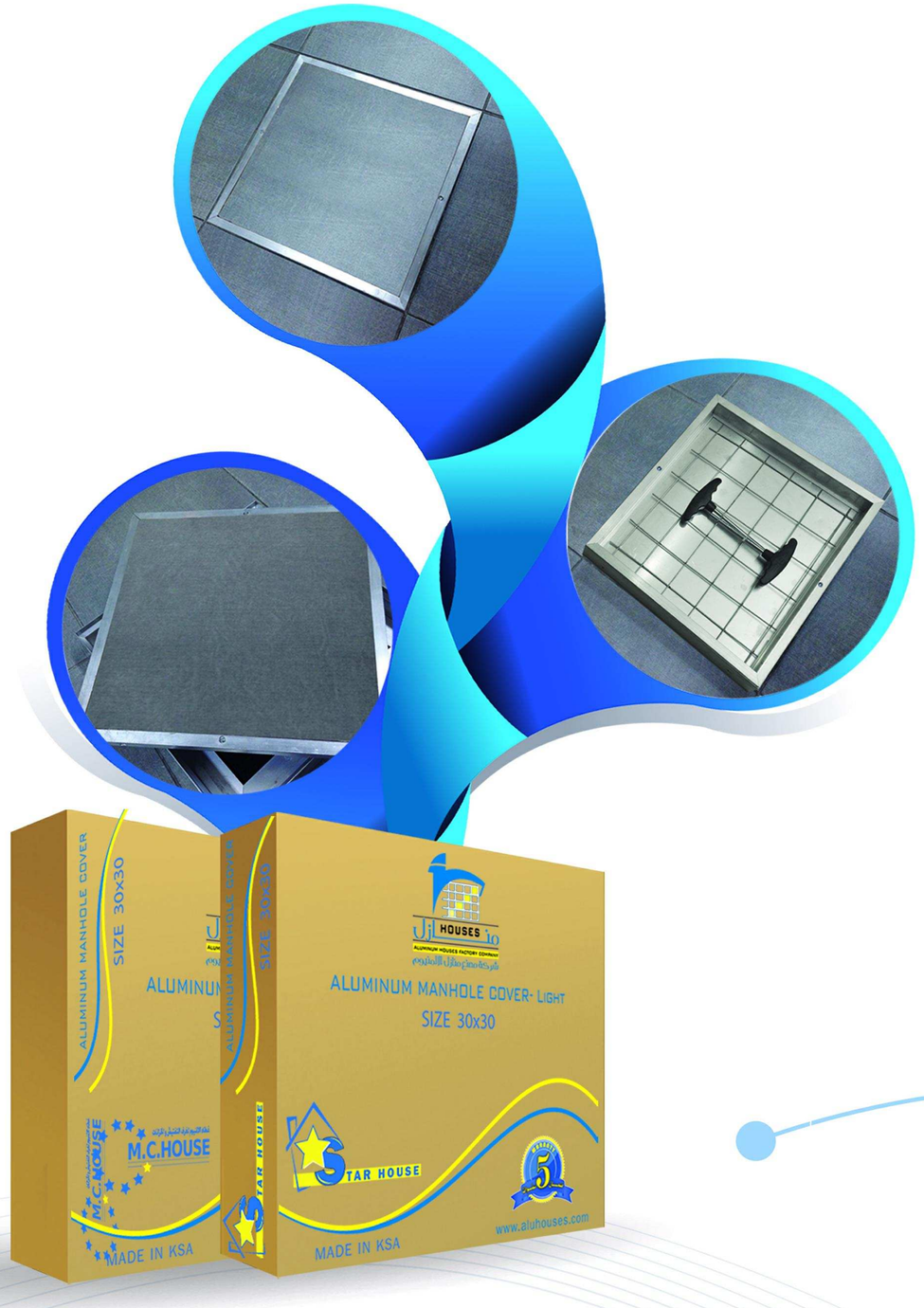

ALUMINUM MANHOLE COVER غطاء المنيوم لغرف التفتيش

CODE	SIZE	SASH PROFILE	FRAME PROFILE	WEIGHT / KG
ALMC030	30 x 30	49.7 x 57.8 x 10.7	61.8 x 64.3 x 6.8	4.15
ALMC040	40 x 40	49.7 x 57.8 x 10.7	61.8 x 64.3 x 6.8	5.50
ALMC050	50 x 50	49.7 x 57.8 x 10.7	61.8 x 64.3 x 6.8	7.40
ALMC060	60 x 60	49.7 x 57.8 x 10.7	61.8 x 64.3 x 6.8	9.55
ALMC070	70 x 70	49.7 x 57.8 x 10.7	61.8 x 64.3 x 6.8	11.90
ALMC080	80 x 80	49.7 x 57.8 x 10.7	61.8 x 64.3 x 6.8	17.20
ALMC090	90 x 90	49.7 x 57.8 x 10.7	61.8 x 64.3 x 6.8	20.50
ALMC100	100 x 100	49.7 x 57.8 x 10.7	61.8 x 64.3 x 6.8	24.30

ALUMINUM MANHOLE COVER "LIGHT" - "خفيف" غطاء المنيوم لغرف التفتيش

CODE	SIZE	SASH PROFILE	FRAME PROFILE	WEIGHT / KG
ALMCL030	30 x 30	43.2 x 52.1 x 6.1	48.0 x 60.0 x 6.2	2.95
ALMCL040	40 x 40	43.2 x 52.1 x 6.1	48.0 x 60.0 x 6.2	4.10
ALMCL050	50 x 50	43.2 x 52.1 x 6.1	48.0 x 60.0 x 6.2	5.35
ALMCL060	60 x 60	43.2 x 52.1 x 6.1	48.0 x 60.0 x 6.2	6.75
ALMCL070	70 x 70	43.2 x 52.1 x 6.1	48.0 x 60.0 x 6.2	10.10
ALMCL080	80 x 80	43.2 x 52.1 x 6.1	48.0 x 60.0 x 6.2	12.75
ALMCL090	90 x 90	43.2 x 52.1 x 6.1	48.0 x 60.0 x 6.2	15.45
ALMCL100	100 x 100	43.2 x 52.1 x 6.1	48.0 x 60.0 x 6.2	17.50

1500kg

غطاء المنيوم لخزانـــات المياه

ALUMINUM WATER TANK COVER

CODE	SIZE	SASH PROFILE	FRAME PROFILE	WEIGHT / KG
ALMCW050	50 x 50	49.7 x 57.8 x 10.7	110 x 95 x 6.8	8.85
ALMCW060	60 x 60	49.7 x 57.8 x 10.7	110 x 95 x 6.8	11.00
ALMCW070	70 x 70	49.7 x 57.8 x 10.7	110 x 95 x 6.8	15.00
ALMCW080	80 x 80	49.7 x 57.8 x 10.7	110 x 95 x 6.8	21.00
ALMCW090	90 x 90	49.7 x 57.8 x 10.7	110 x 95 x 6.8	26.10
ALMCW100	100 x 100	49.7 x 57.8 x 10.7	110 x 95 x 6.8	31.00

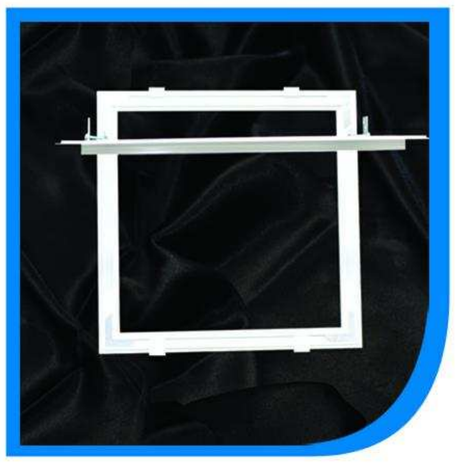

MAINTENANCE ACCESS COVER فتحة الصيانة

CODE	LENGTH/MT (MM)	WEIGHT/KG
ALMCM030	30 x 30	1.10
ALMCM040	40 x 40	1.42
ALMCM050	50 x 50	1.71
ALMCM060	60 x 60	2.05
ALMCM070	70 x 70	2.37
ALMCM080	80 x 80	2.72

STANDARD PIPE CLAMP WITH RUBBER PROFILE & COMBI NUT (M8 / M10) SCREW (M6)

- Used for hanging pipes to the walls ceilings and floors (vertical/horizontal).
- EPDM seal for .
  - Noise reduction level up to 15 dB according to DIN4109 .
  - Vibration reduction .
  - Partial compensation of thermal expansion .
- Easy and safe assembly .
- Electro galvanized against corrosion protection (Plating thickness 8-10micron).
- Hanging Type is M8 / M10 combi Nut.

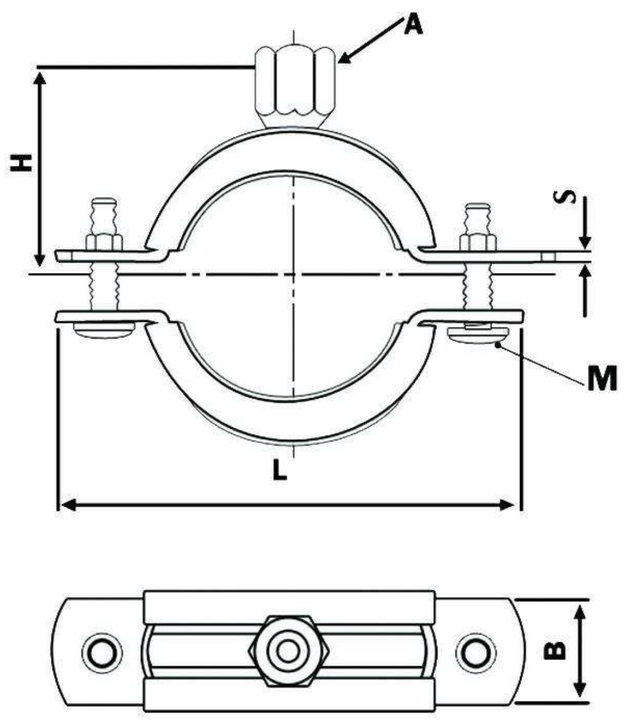

SIZE (INCH)	BREAKING LOAD (KN)	RECOMMENDED LOAD (KN)
1/2" - 1"	3.9	1.30
1 1/4" - 2"	4.8	1.60
2 1/2" - 3"	6.9	2.3
4" - 8"	7.8	2.6

CODE	SIZE (INCH)	CLAMPING RANGE (mm)	L (mm)	H (mm)	M	SxB (mm)	A	QUANTITY-BOX	WEIGHT-BOX
RCL 020	1/2"	20 - 24	62.5	36	M6	1. 5 x 20	M8/10		
RCL 025	3/4"	25 - 28	68.5	39	M6	1.5 x 20	M8/10		
RCL 032	1"	32 - 35	76	42.5	M6	1.5 x 20	M8/10		
RCL 040	1 1/4"	39 - 46	91.5	47	M6	1.5 x 20	M8/10		
RCL 050	1 1/2"	48 - 53	99	50.5	M6	1.5 x 20	M8/10		
RCL 063	2"	59 - 66	112	57	M6	1.5 x 20	M8/10		
RCL 075	2 1/2"	74 - 80	134	66	M6	2 x 25	M8/10		
RCL 089	3"	87 -94	146.5	71.5	M6	2 x 25	M8/10		
RCL 110	4"	110 - 116	173	85	M6	2.5 x 25	M8/10		
RCL 141	5"	135 - 143	199	98	M6	2.5 x 25	M8/10		
RCL 160	6"	162 - 170	227	110.5	M6	2.5 x 25	M8/10		
RCL 200	8"	207 - 219	280.7	138	M6	2.5 x 25	M8/10		

- Used for hanging heavy pipes as steal pipes , duct pipes .
- Used Galvanized steal or Electrogalvanized (8 - 10 micron) .
- Easy and safe assembly .

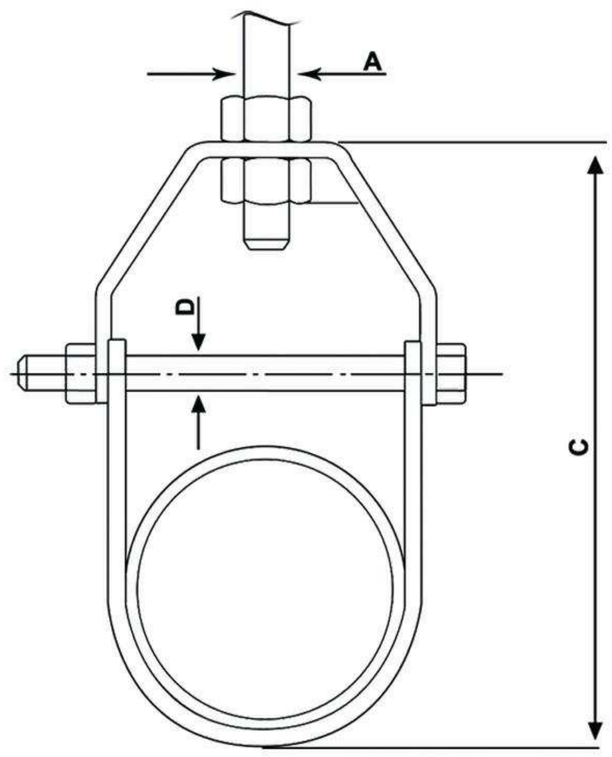

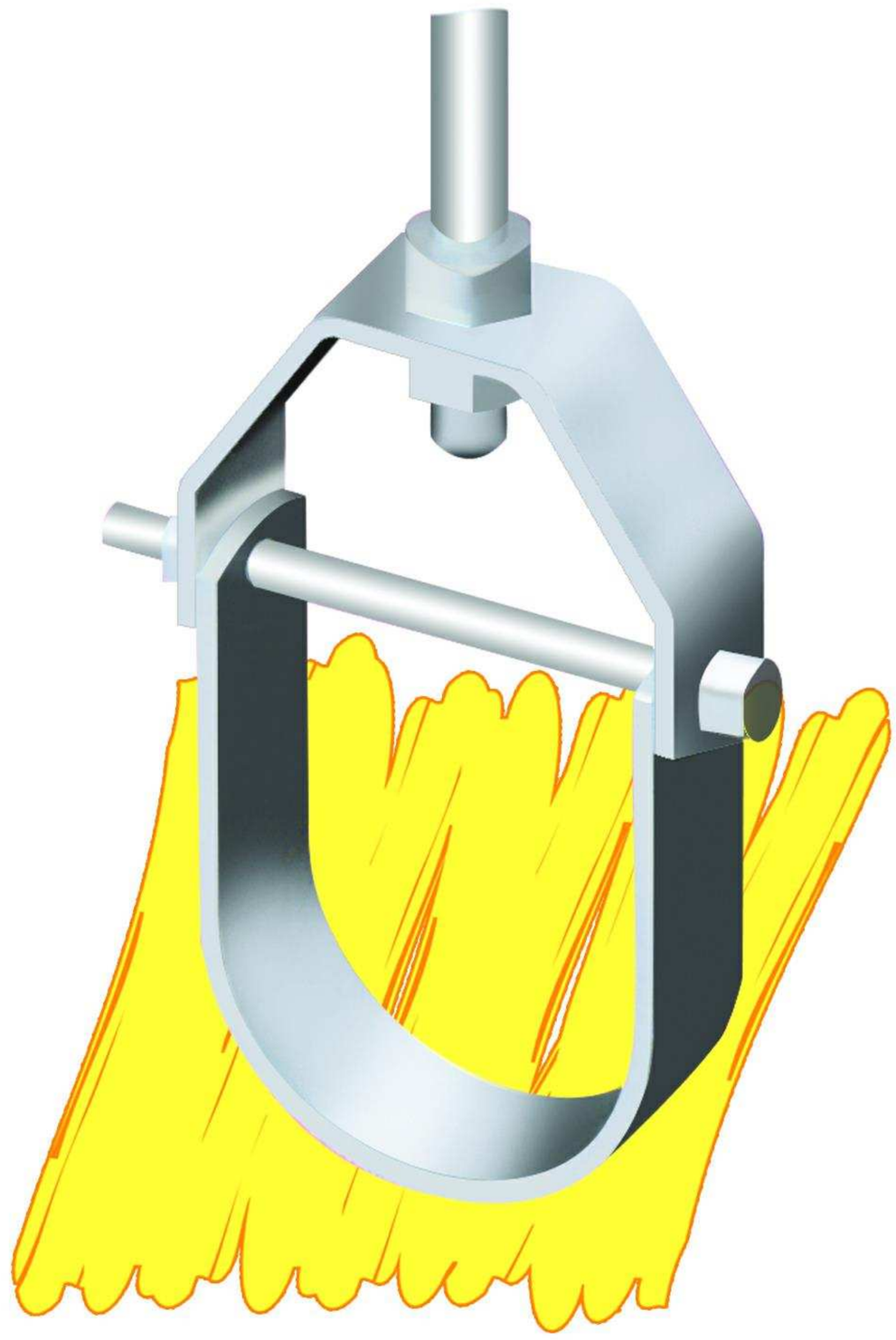

CODE	SIZE (INCH)	SIZE OF STEAL UPPER	SIZE OF STEAL DOWN	A	C	D	QUANTITY-BOX	WEIGHT-BOX
RCHO033	1″	2. 5 x 25	2. 5 x 25	10	95	6 x 60		
RCHO040	1 1/4″	2.5 x 25	2.5 x 25	10	99	6 x 70		
RCHO050	1 1/2″	2.5 x 25	2.5 x 25	10	108	6 x 80		
RCHO063	2″	3 x 25	3 x 25	10	125	6 x 90		
RCHO075	2 1/2″	3 x 32	3 x 32	14	153	8 x 110		
RCHO089	3″	3 x 32	3 x 32	14	163	8 x 120		
RCHO114	4″	3 x 32	3 x 32	16	210	10 x 160		
RCHO141	5″	4 x 40	4 x 40	16	230	10 x 180		
RCHO168	6″	4 x 40	4 x 40	16	275	12 x 220		

STANDARD STEEL PLUGS - SINGLE SEAL

- Used for testing water pipe lines .
- Rubber Seal Standard type or chemical resistant.
- Pressure Plate are made of Steel pressing.
- All materials are zinc plated corrosion resistant.

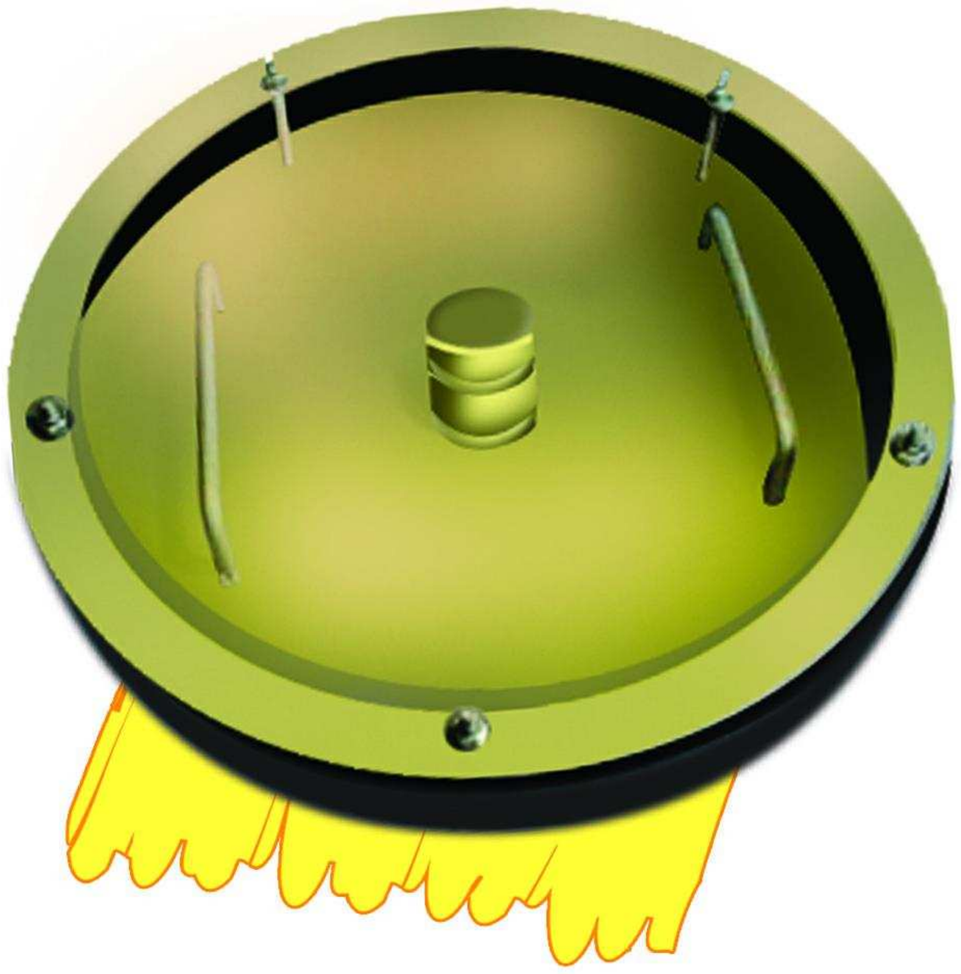

CODE	SIZE (INCH)	MIN FIT PIPE SIZE (MM)	MAX FIT PIPE SIZE (MM)	MAX BACK PRESSURE (PSI)	WATER WAY (MM)	WEIGHT OF PLUG GR
TPH010042	40	36	52	30	15	170
TPH010048	50	50	63	30	15	200
TPH010060	65	61	82	30	15	240
TPH010073	75	73	92	20	15	280
TPH010089	90	85	102	15	15	300
TPH010114	100	94	110	10	15	350
TPH010141	125	126	142	10	15	525
TPH010168	150	141	165	10	15	685
TPH010219	200	190	215	7	25	1400
TPH010273	250	241	270	7	25	2250
TPH010323	300	295	325	7	25	3800
TPH010350	350	344	388	5	25	6700

DAS CERTIFICATION

Quality Management System

Certificate of Approval

This is to certify that the QMS of

Aluminum Houses Factory Company Ltd.

PO Box 122088, Jeddah 21332, Saudi Arabia

Has been assessed and found to meet the requirements of

ISO 9001:2008

This certificate is valid for the following scope of operations:

Manufacture & Supply of Aluminium Ladders & Man-hole Covers, Aluminium Maintenance Access Doors, Aluminium Water Grill, Steel Fixing Materials & Other Similar Products

Authorised by:

Stan Wright
Chief Executive

Date of Certificate Issue: 17 February 2015
Certificate Valid Until: 16 February 2018

Recertification audit before 17 January 2018. Certified since 17 February 2015.
This certificate is the property of DAS Certification and remains valid subject to satisfactory annual Surveillance audits.

SN Registrars (Holdings) Limited **Certificate Number: DAS 78986393/31/Q**

Registration House, 22b Church Street,
Rushden, Northamptonshire,
NN10 9YT, UK
Tel: +44 (0) 1933 381859
Email: info@dascertification.co.uk
Web: www.dascertification.co.uk
Company number: 07659067

MEMBER OF MULTILATERAL RECOGNITION ARRANGEMENT IAF

DAS CERTIFICATION ISO9001:2008
Member of SN Registrars (Holdings) Ltd

UKAS MANAGEMENT SYSTEMS 8327